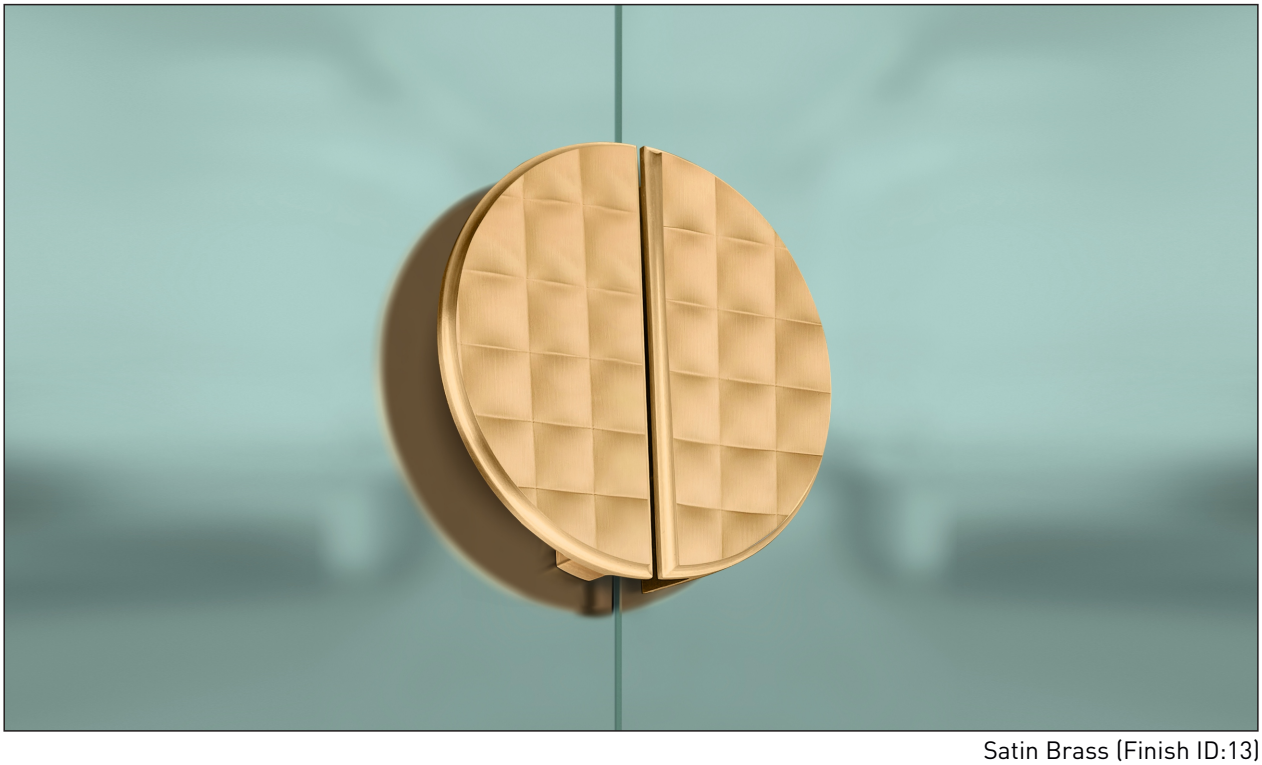

Satin Brass (Finish ID:13)

BELGIAN SIDE BY SIDE BACK TO BACK DOOR PULL

	Item Code	Size (mm & Inches)	Material	Size (Inches)				Fig.
				A	B	C	D	
1	DDP.1082.8".XX.XXX.XXXX	203.2mm (8")	Brass	8	4	7	1.14	1
2	DDP.1082.12".XX.XXX.XXXX	304.8mm (12")	Brass	12	6	11	1.38	1
3	DDP.1082.18".XX.XXX.XXXX	457.2mm (18")	Brass	18	9	17	1.5	1
4	DDP.1082.8".XX.XXX.XXXX	203.2mm (8")	Bronze	8	4	7	1.14	1
5	DDP.1082.12".XX.XXX.XXXX	304.8mm (12")	Bronze	12	6	11	1.38	1
6	DDP.1082.18".XX.XXX.XXXX	457.2mm (18")	Bronze	18	9	17	1.5	1
7	DDP.1082.8".XX.XXX.XXXX	203.2mm (8")	Leopard Hammered over Brass	8	4	7	1.14	1
8	DDP.1082.12".XX.XXX.XXXX	304.8mm (12")	Leopard Hammered over Brass	12	6	11	1.38	1
9	DDP.1082.18".XX.XXX.XXXX	457.2mm (18")	Leopard Hammered over Brass	18	9	17	1.5	1

"XX" in item code denotes Finish ID.
"XXX" in item code denotes Door Thickness.
"XXXX" in item code denotes Door Material.

This product is Supplied with Mounting Kit including with the Order.

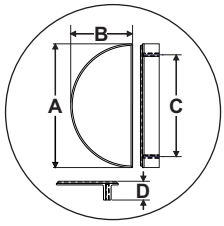

FIG. 1

How to Order

DDP.1082.8".13.GLASS.1"

- DDP — BACK TO BACK DOOR PULL
- 1082 — STYLE : BELGIAN SIDE BY SIDE
- 8" — SIZE : OAL 8 INCH
- 13 — FINISH ID : 13
- GLASS — DOOR MATERIAL : GLASS
- 1" — DOOR THICKNESS : 1 INCH

Belgian Side by Side Back to Back Door Pull Finish Options

Base Material : Brass — Standard Finishes (2-3 Weeks Delivery)

Brush Nickel
(Finish ID:3)

Aged Brass
(Finish ID:4)

Unlacquered
Polished Brass
(Finish ID:7U)

Polished Nickel
(Finish ID:8)

Satin Brass
(Finish ID:13)

Base Material : Brass — Custom Finishes (3-4 Weeks Delivery)*

Matte Black
(Finish ID:19)

Graphite
(Finish ID:61)

Titanium
(Finish ID:79)

Ombre
(Finish ID:92)

Brush Chrome
(Finish ID:95)

Leopard Hammered
over Brush Nickel
(Finish ID:99-3)

Leopard Hammered
over Aged Brass
(Finish ID:99-4)

Leopard Hammered
over Polished Nickel
(Finish ID:99-8)

Leopard Hammered
over Satin Brass
(Finish ID:99-13)

Base Material : Bronze — Custom Finishes (3-4 Weeks Delivery)*

Silicon Bronze Light
(Finish ID:53)

Silicon Bronze Dark
(Finish ID:53D)

White Bronze
(Finish ID:54)

Door Material	Door Thickness
1. Wood	5/16", 3/8", 1/2", 3/4", 1", 1 1/4", 1 1/2", 1 3/4", 2", 2 1/4", 2 1/2"
2. Metal	5/16", 3/8", 1/2", 3/4", 1", 1 1/4", 1 1/2", 1 3/4", 2", 2 1/4", 2 1/2"
3. Glass	5/16", 3/8", 1/2", 3/4", 1"

- Custom finishes cannot be returned or refunded. We are unable to accept cancellations for custom finish order unless within 48 hours of the order being placed.
- We have uniform pricing for all non-hammered finishes listed above as long as base material and size is same.
- Contact us for customized finishes, refer pages F1, F2, F3 & F4 for finish glossary.

BACK TO BACK
HANDLE ILLUSTRATED

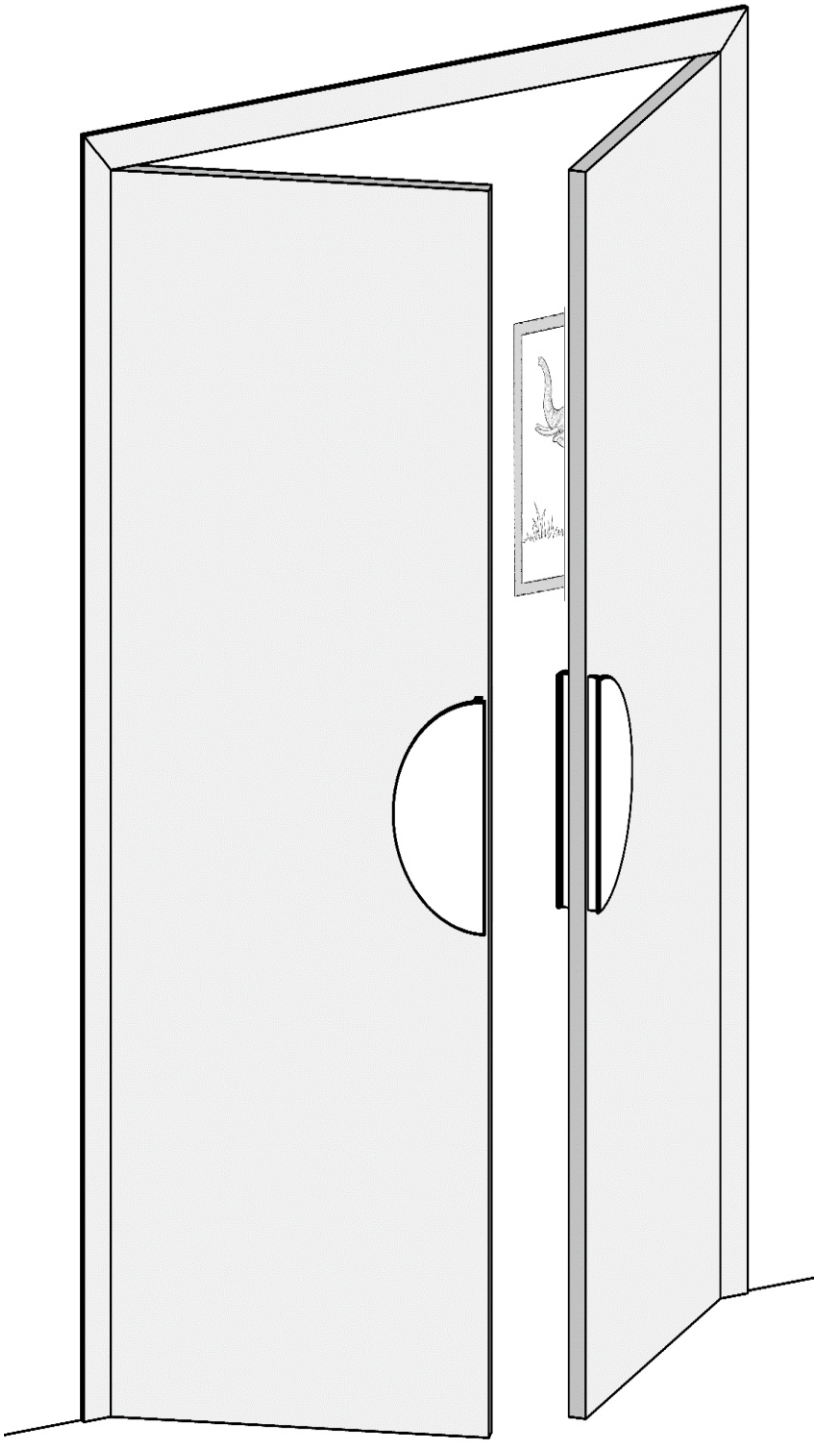

Required Tools

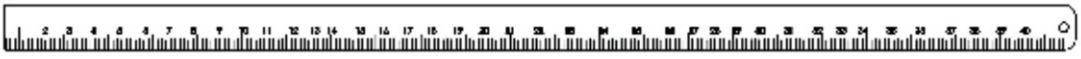

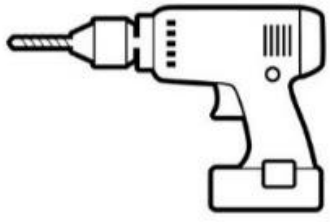

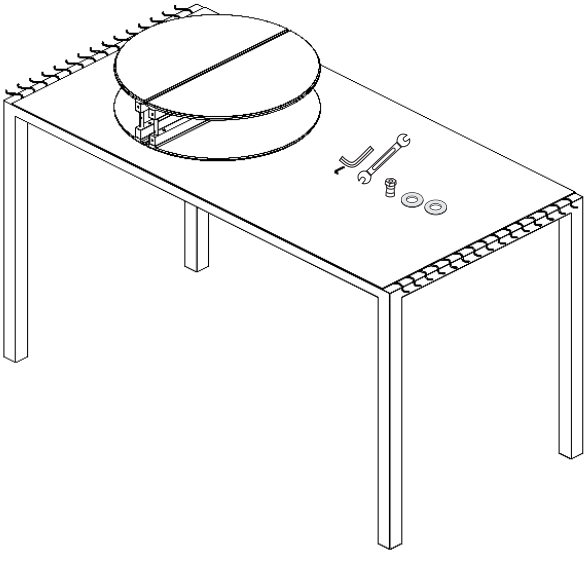

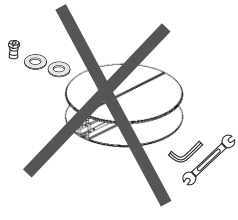

Step Wise Packing List			
S.No.	Part Number	Qty	Steps
1	DDP.1082.XX.XX.XXX.XXXX	1x	1
2	SLEEVE	1x	1
3	LNKY2.5	1x	1
4	INSERT	1x	1
5	WASHER	2x	1
6	DDP.SPANNER (No.10,11)	1x	4
7	Manual	1x	-

How To Read

DDP.1082.XX.XX.XXX.XXXX

- DDP. → Back To Back
- 1082 → Style ID:- Belgian Side by Side
- XX → Size:-CC
- XX → Finish ID:- XX
- XXX → Door Thickness:-XXX
- XXXX → Door Material:- Wood/Glass

Including only Glass Door

USE SLEEVE

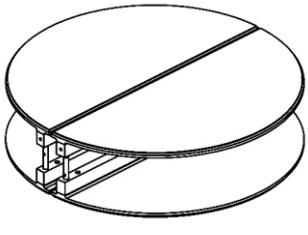

DDP.1082.XX.XX.XXX.XXXX

LNKY2.5

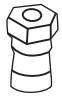

INSERT

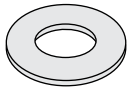

WASHER

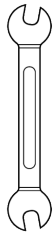

DDP.SPANNER (No.10,11)

STEP-1

Step Wise Packing List			
S.No.	Part Number	Qty	Steps
1	DDP.1082.XX.XX.XXX.XXXX	1x	1
2	SLEEVE	1x	1
3	LNKY2.5	1x	1
4	INSERT	1x	1
5	WASHER	2x	1

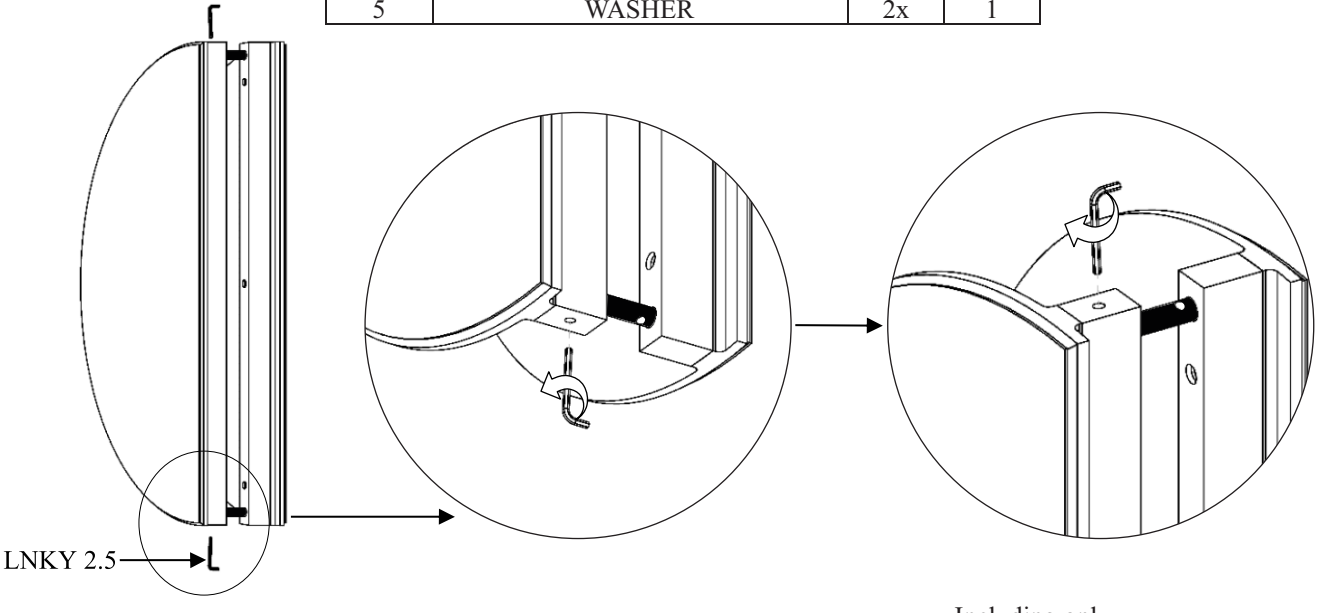

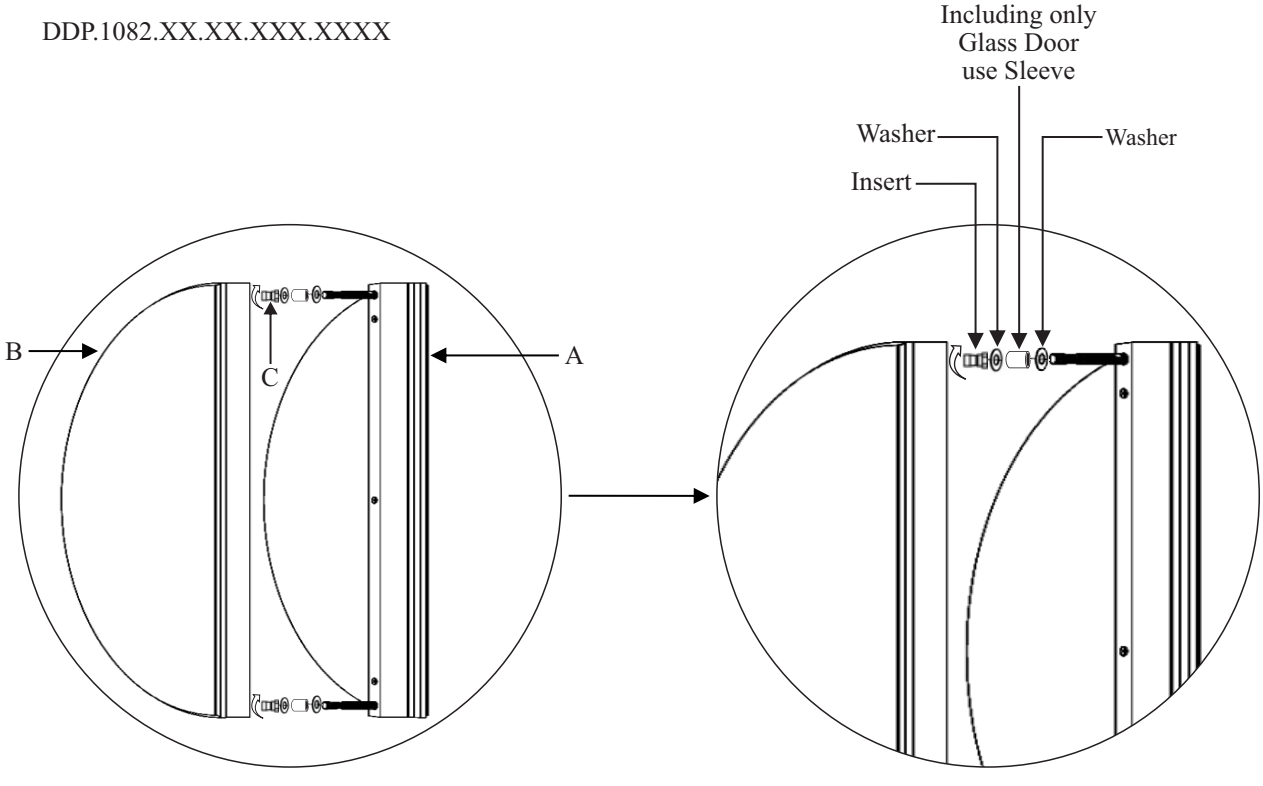

STEP-2

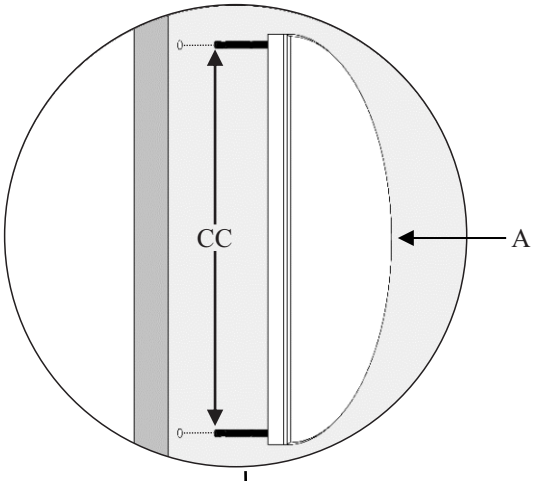

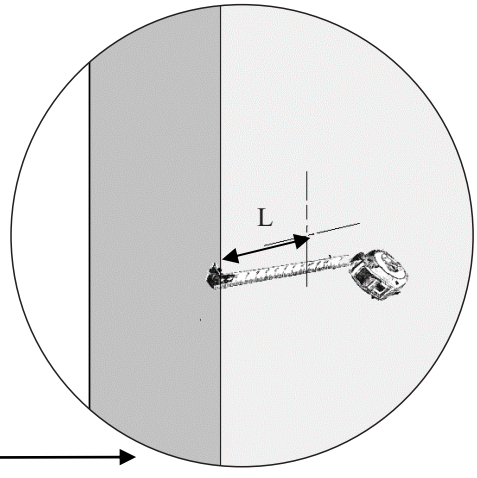

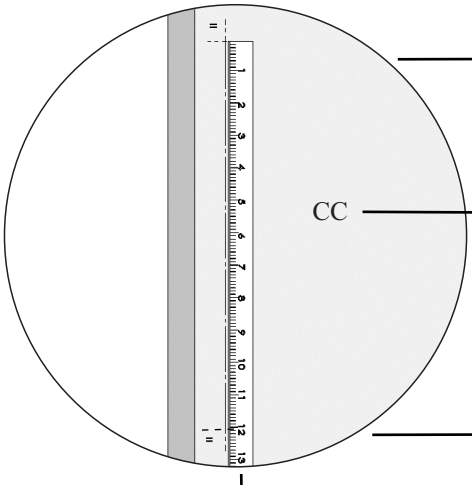

DDP.1082.XX.XX.XXX.XXXX

Size:-OAL

8”
12”
18”

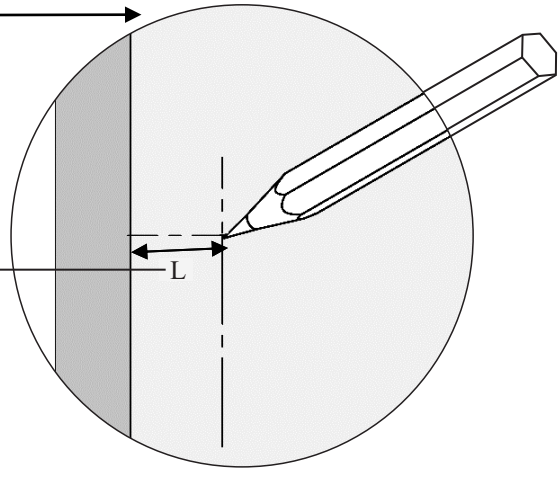

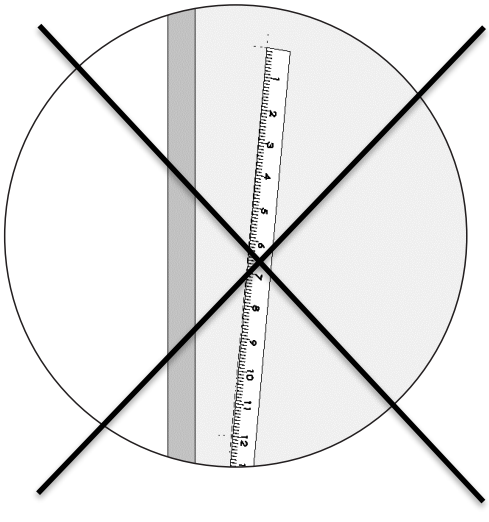

8”OAL =18mm
12”OAL= 20mm
18”OAL= 22mm

STEP-3

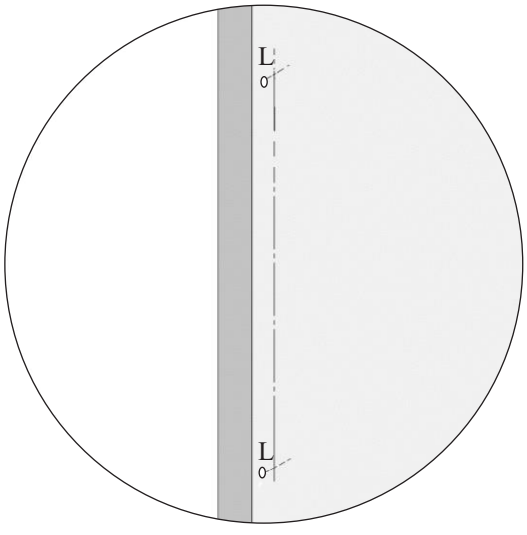

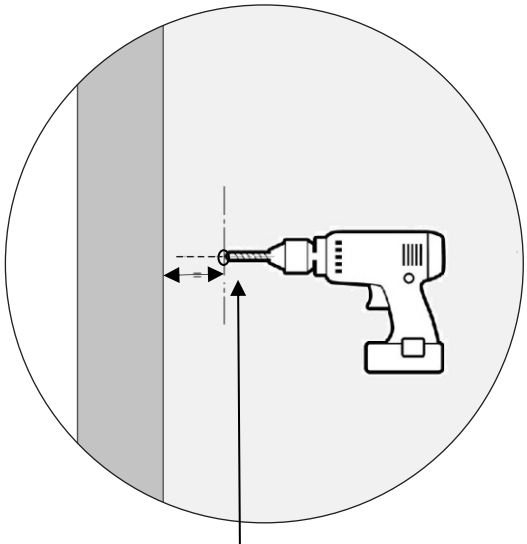

DRILL SIZE			
	Glass	Wood	Metal
DDP	3/8” (9.5mm)	1/4” (6.4mm)	1/4” (6.4mm)

STEP-4

Step Wise Packing List			
S.No.	Part Number	Qty	Steps
6	DDP.SPANNER (No.10,11)	1x	4

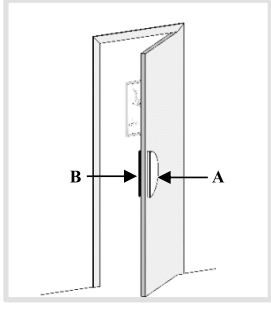

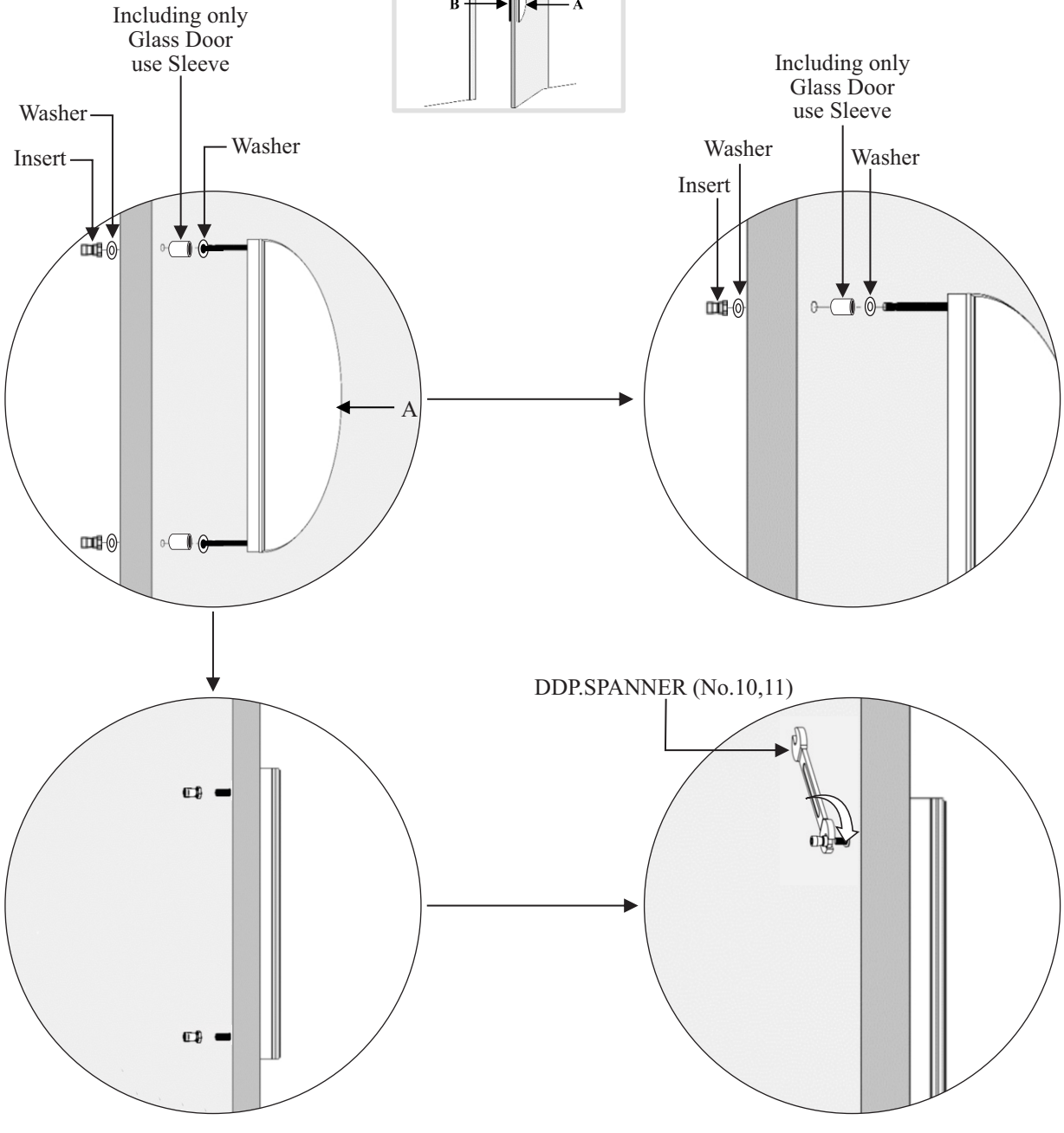

STEP-5

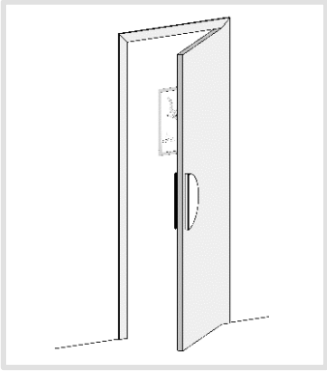

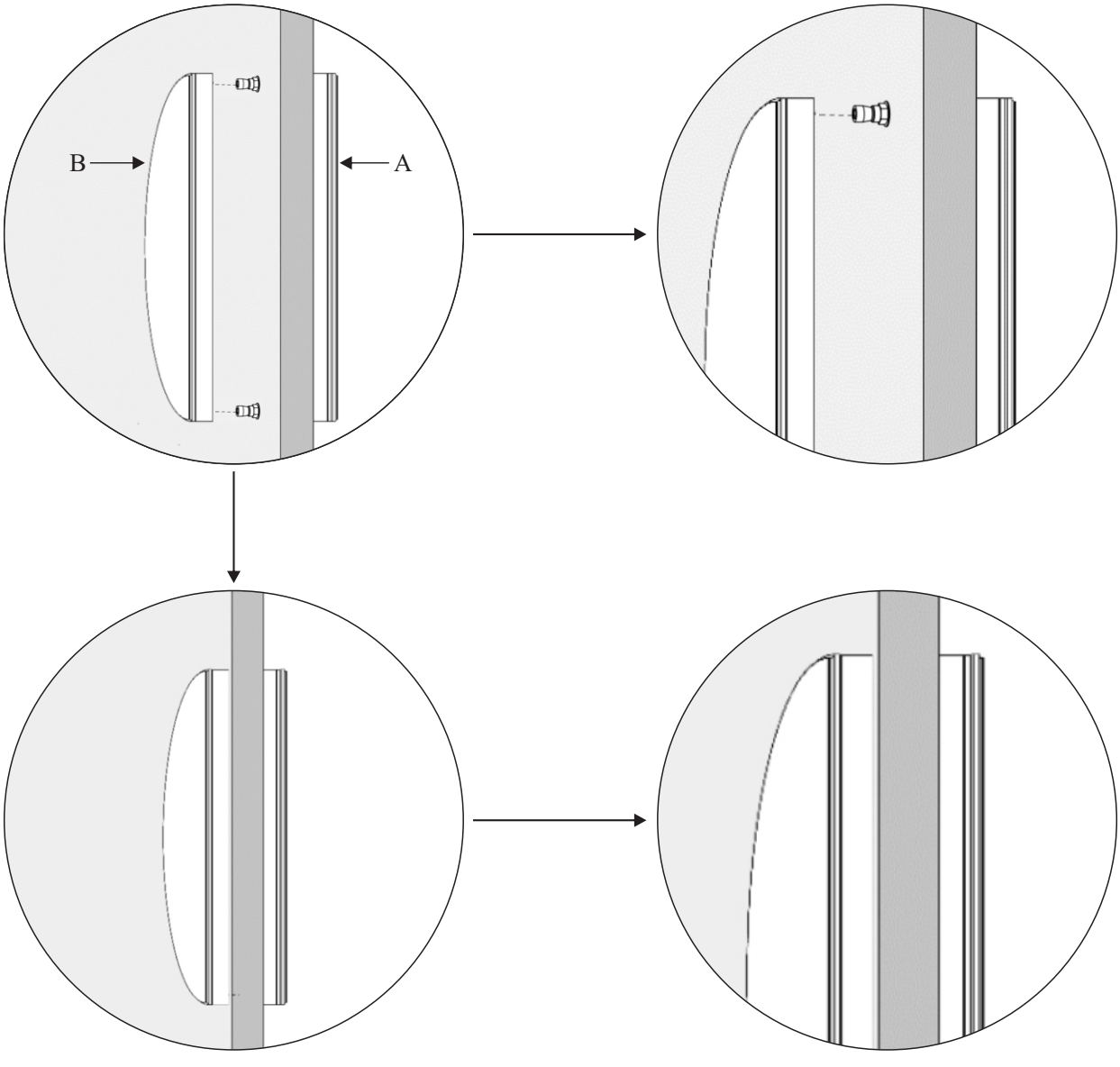
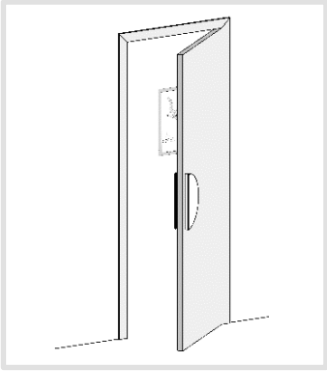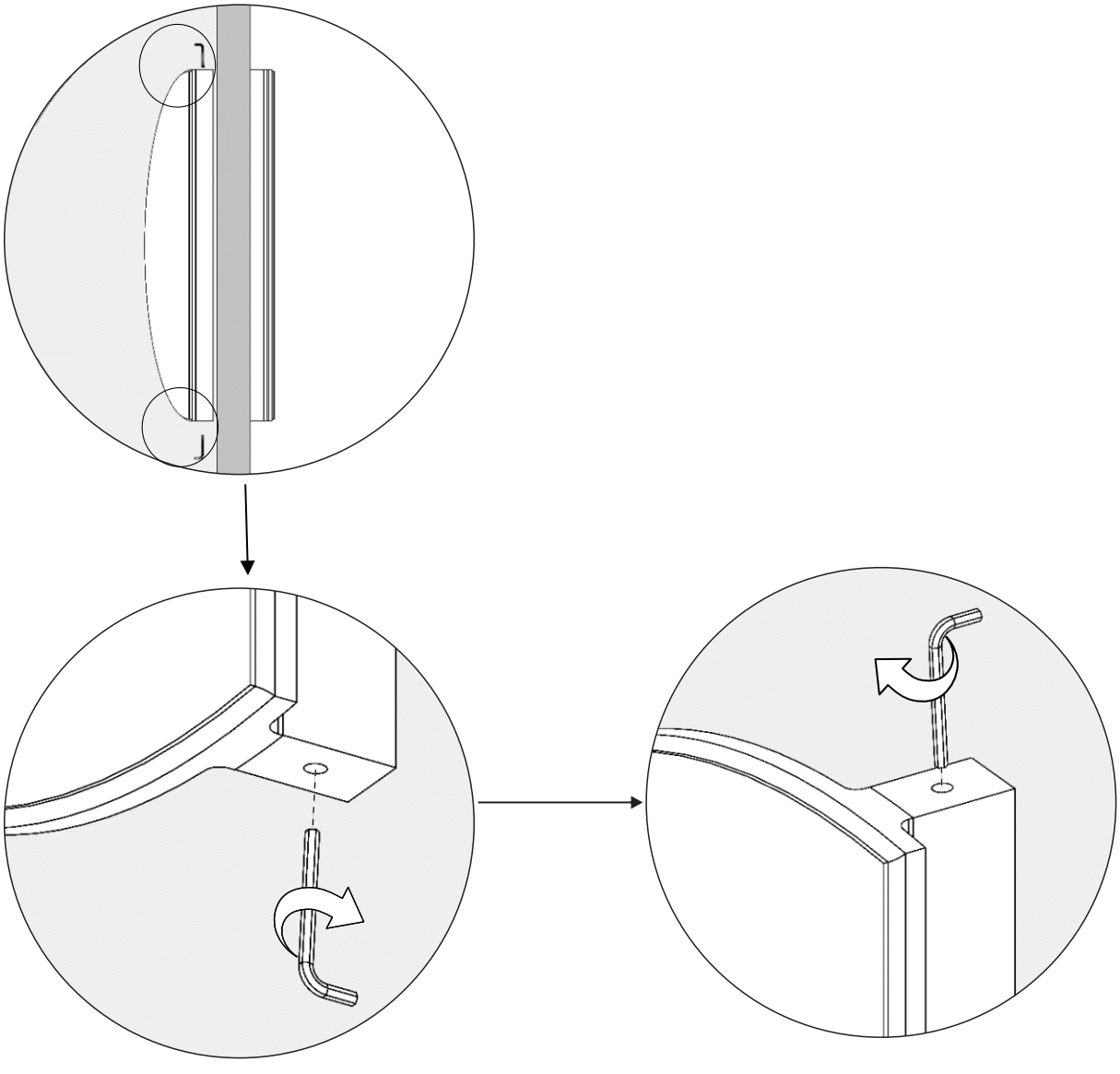
STEP-6